maro D'Italia

NON ELECTRIC

TOILET SEAT

ABOUT

The new sensation in toilet bidet seats. Maro D'Italia FP is a non electric operated bidet seat that can be fitted onto most existing toilet systems. Installation is as easy as replacing your toilet seat. No major plumbing works. It is that simple! Maro D'Italia FP lets you maintain high level of toilet hygiene at low cost as it is inexpensive to own one and as it is non-electric operated, the running cost is very low. Key features: Height only 6 cm/2.3 inches, Nozzle automatically extends when activated, Aerated water jet, Easy installation, No electricity needed, Easy operation, Made from High quality Anti-bacterial Polypropylene, Soft-Close seat and lid, 2 nozzles, automatic nozzle cleaning.

FP104

Maro D'Italia FP104 is a non electric operated bidet seat that can be fitted onto most existing toilet systems. Installation is as easy as replacing your toilet seat. No major plumbing works required. It is that simple!

Maro D'Italia FP104 lets you maintain high level of toilet hygiene at low cost as it is inexpensive to own one. Because of its non-electric operation, the running costs are very low.

dimenisons/Weight	370x500x60mm/2.5kg
acceptable water pressure	0.7-7.5bar
material	PP in white
water intel connection	1/2 Brass
package content	Bidet seat, toilet fixation kit, 1/2 T-connector

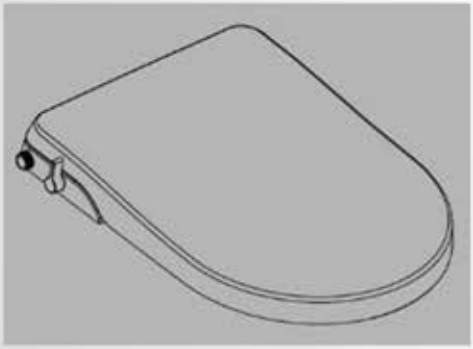

Functions & Features

- Rear wash
- Front wash
- Self-cleaning nozzles
- Adjustable water presure
- Slow-close lid and seat
- Quick release and installation function

Dimensions of your existing toilet:
-your toilet bowl must be within these measurements.

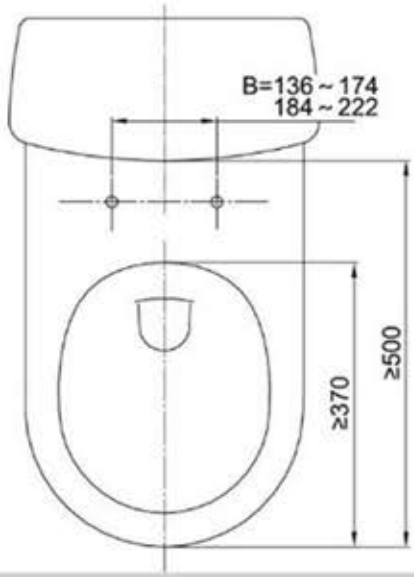

Bidet seat dimensions:

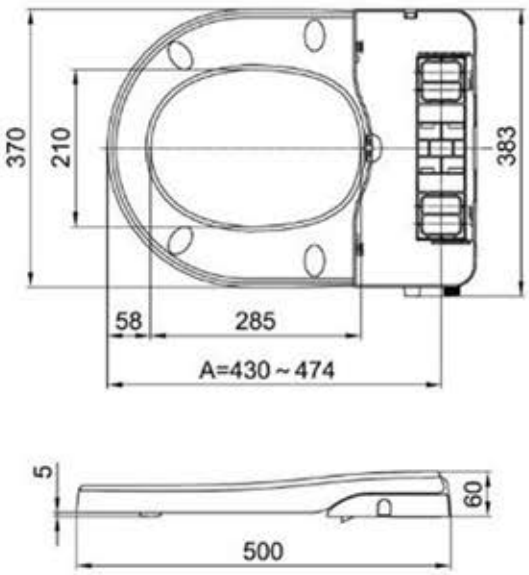

FP106

Maro D'Italia FP106 is a non electric operated bidet seat that can be fitted onto most existing toilet systems. Installation is as easy as replacing your toilet seat. No major plumbing works required. It is that simple!

Maro D'Italia FP106 lets you maintain high level of toilet hygiene at low cost as it is inexpensive to own one. Because of its non-electric operation, the running costs are very low.

dimenisons/Weight	370x500x62mm/2.5kg
acceptable water pressure	0.7-7.5bar
material	PP in white
water intel connection	1/2 Brass
package content	Bidet seat, toilet fixation kit, 1/2 T-connector

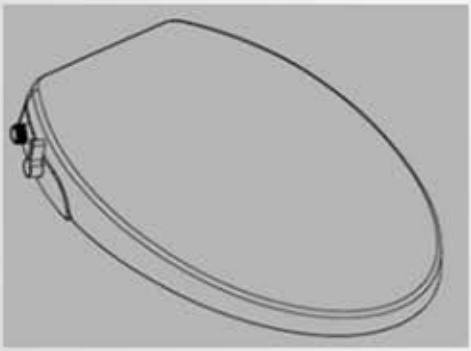

Functions & Features

- Rear wash
- Front wash
- Self-cleaning nozzles
- Adjustable water presure
- Slow-close lid and seat
- Quick release and installation function

Dimensions of your existing toilet:
-your toilet bowl must be within these measurements.

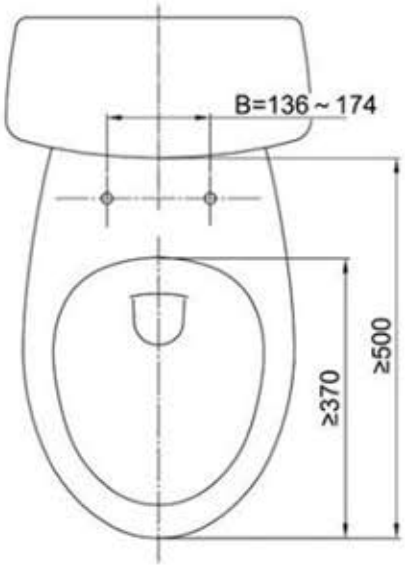

Bidet seat dimensions:

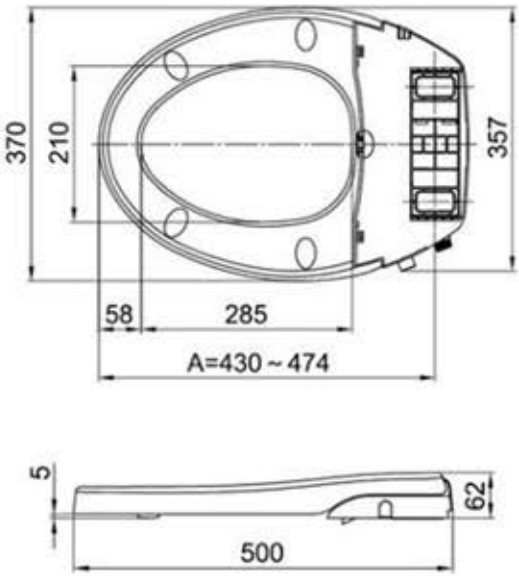

Wash
Bidet

FP108

Maro D'Italia FP106 is a non electric operated bidet seat that can be fitted onto most existing toilet systems. Installation is as easy as replacing your toilet seat. No major plumbing works required. It is that simple!

Maro D'Italia FP106 lets you maintain high level of toilet hygiene at low cost as it is inexpensive to own one. Because of its non-electric operation, the running costs are very low.

dimenisons/Weight	370x480x62mm/2.5kg
acceptable water pressure	0.7-7.5bar
material	PP in white
water intel connection	1/2 Brass
package content	Bidet seat, toilet fixation kit, 1/2 T-connector

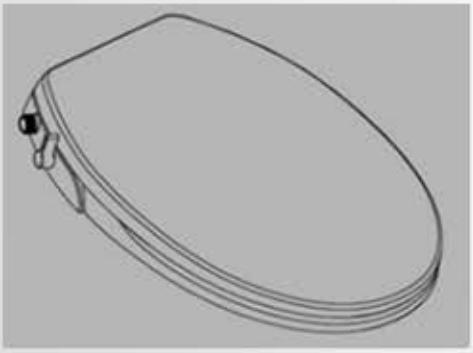

Functions & Features

- Rear wash
- Front wash
- Self-cleaning nozzles
- Adjustable water presure
- Slow-close lid and seat
- Quick release and installation function

Dimensions of your existing toilet:
-your toilet bowl must be within these measurements.

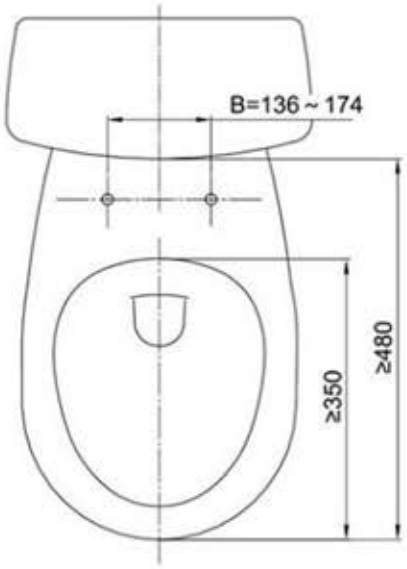

Bidet seat dimensions:

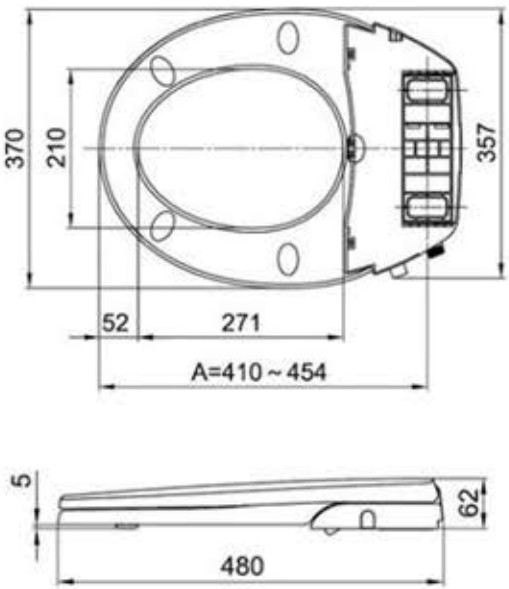

FUNCTIONS

Slim
Bidet
Rear wash
Eco
Jog-dial
Nozzle self-cleaning
Soft close
No Electric
Twin nozzle

Maro D'Italia Service
Number: 0448081350068
E-mail:
info@maro-bathroom.com

© Copyright by Maro D'Italia - All right reserved.

MADE IN ITALY